This drawing may not be copied or distributed in any way without the written permission of Cavagna Group Valmacco, Cavaglià BS Italy

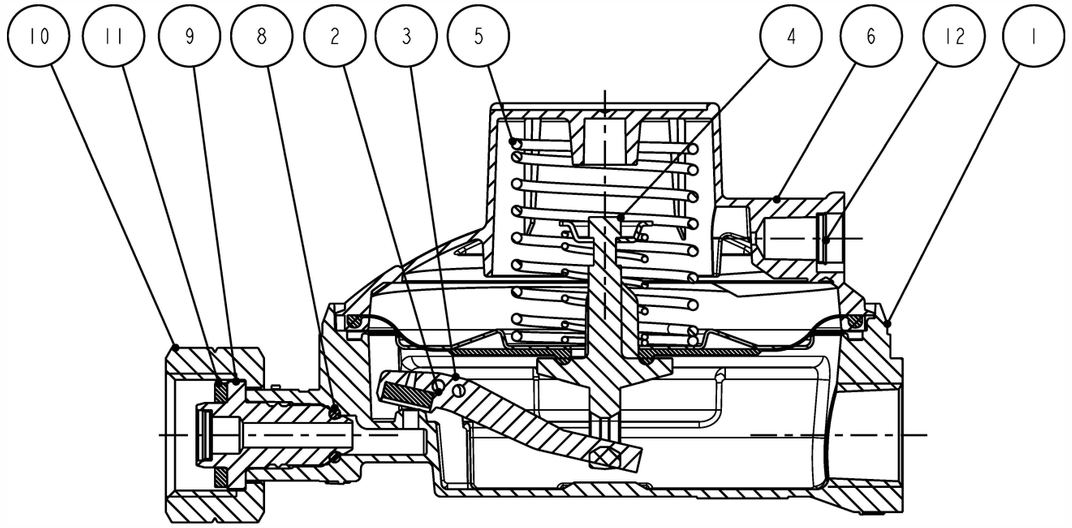

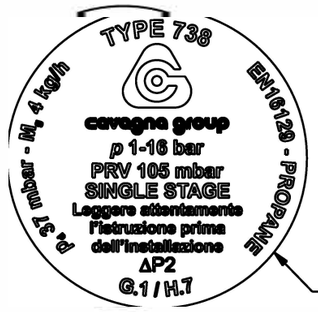

INK STAMP

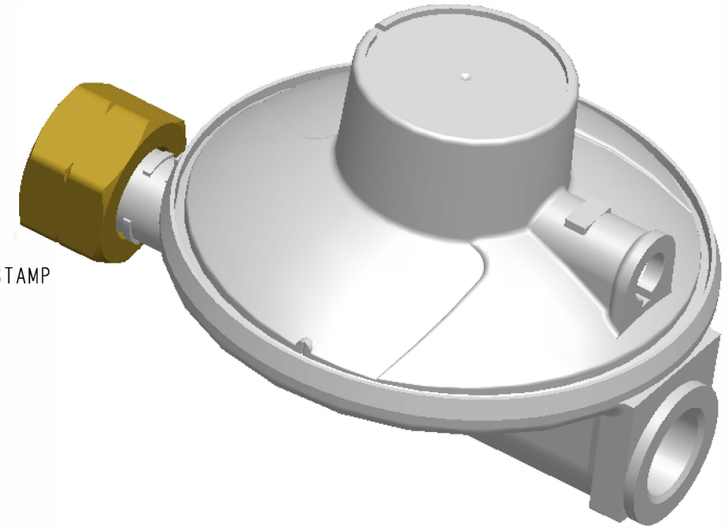

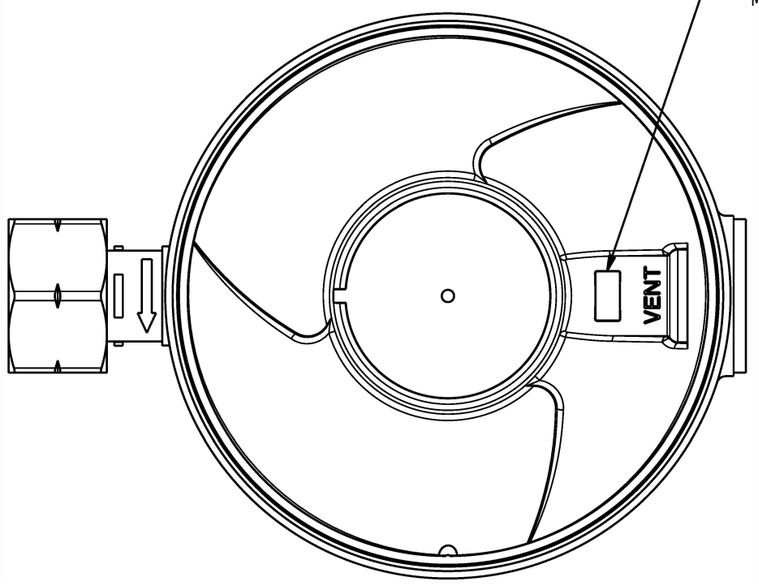

NO	NO PRODUCT	DENOMINATION	QTY
1	00-4-150-0049	SCATOLA MOD.73 RAPP.1/6 - (BROCCIATA - 3/8F)	1
2	05-4-110-0020	PIN-LEVER	1
3	02-4-950-0005	S/1 LEVETTA MOD.73 USA	1
4	09- -950-0074	S/1 MEMBRANA VDS MOD.73 EUROPA	1
5	07- -110-0216	MOLLA TARATURA 37 mbar (TIPO734)	1
6	01- -121-0072	COPERCHIO MOD.73 EUR	1
7	24- -110-0001	WHITE ALUMINIUM RAL 9006	1
8	04- -110-0502	O RING	1
9	16- -950-0092	S/1 RACCORDO BROCCIATO	1
10	10- -110-0005	UNION NUT - W 20 X 1/14'' G1-EN 12864	1
11	04- -110-0007	SEALING WASHER	1
12	16- -110-1006	FILTER-STANDARD ∅8.5 x 1.5TK	1
13	18- -310-0903	INK STAMP FOR TYPE 738	1
14	34- -110-1271	INSTRUCTION TYPE 734 - EN16129 - UNI 7131/2014 (IT-GR)	1
15	23- -210-0221	IMBALLO REGOLATORE INDIVIDUALE	1
16	34- -210-2994	SINGLE BOX LABEL	1
17	23- -510-0024	STANDARD BOX (R52)	1
18	34- -210-2995	EXPEDITION BOX LABEL	1

SINGLE BOX LABEL

SINGLE STAGE REGULATOR
TYPE 738 - PROPANE
37 mbar - 4 kg/h
INLET: W20x1/14" L.H. female (G.1)
OUTLET: G 3/8 female (H.7)

EXPEDITION BOX LABEL

Cavagna Group Spa

Type of regulator : 738

Cavagna Part Number : 73-1-890-0108

Description: SINGLE STAGE REGULATOR PROPANE 37 mbar 4 kg/h

Pcs per carton:
Date:

cavagna group

DENOMINATION: SINGLE STAGE REGULATOR TYPE 738 — LPG 37 mbar 4 kg/h

N.A.

	MODEL	ORIFICE	INLET	OUTLET	SHARED	PROD. INT. GROUP
RECA	738	2.5	W20X1/14" L.H.	G 3/8 FEMALE	N.A.	-

PERFORMANCE DOC.	COUNTRY	COUNTRY SPECIFIC	WEIGHT	SCALE	MODIFY FILE	PRODUCT NO	REV
73-055	ITALIA	EN16129	N.A.	1:1	N.A.	73-1-890-0108	1

PROD. EVOLUTION	PROJECT NO.	RELEASE LEVEL	DRAWN BY	VERIFIED BY	APPROVED BY	DATE
DEFINITIVE	DS05444	APPROVED	PEDRINI M.	TOMASELLI L.	SCHLICK B.	15/02/16